LVSA GROUP (PTY) LTD

BUTTERFLY VALVE

SPHERICALLY PROFILED DISC

Proudly Manufactured in South Africa

LVSA BUTTERFLY VALVES :

LVSA manufactures a comprehensive range of butterfly valves. The range addresses water treatment and distribution systems, power plants, utility lines, fire water lines and HVAC. The versatile range is available in various body styles, materials and actuation options to suit customer requirements.

Butterfly Valve :

Body Style	Pressure Rating	2 50	3 80	4 100	6 150	8 200	10 250	12 300	16 400	18 450	20 500	24 600
Wafer	PN 16	•	•	•	•	•	•	•	•	•	•	•
Lugged		•	•	•	•	•	•	•	•	•	•	•
Flanged*		•	•	•	•	•	•	•	•	•	•	•

*Size upto DN1200

LVSA butterfly valves sets a new bench mark in performance. The versatile valve is offered in a variety of elastomer-disc combinations to address various process requirements.

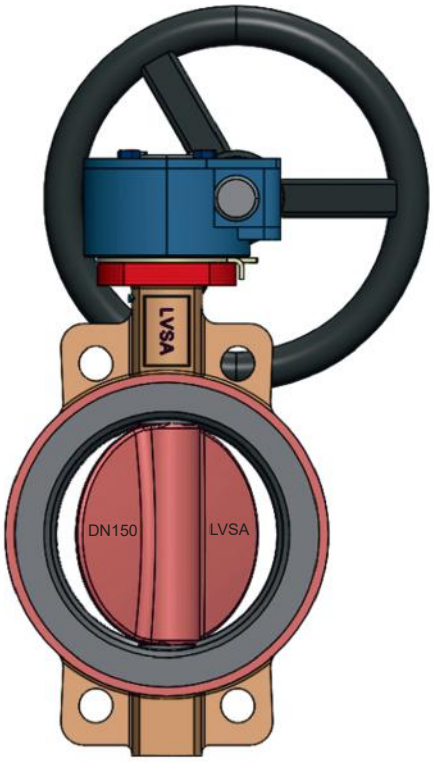

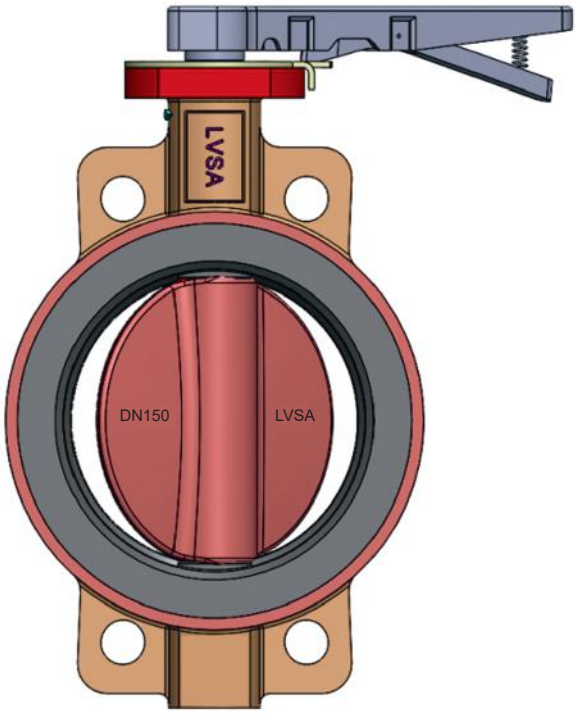

Available from 50mm (2”) to 600mm (24”). The valve is available in Cast iron, SG iron, Carbon steel, & Stainless steel, in a variety of body styles and actuation options.

Testing

All our valves are tested according to EN 12266-1 Standard tests performed are body strength, body tightness, seat tightness and functional test.

To ensure constant high quality valves all components are subjected to stringent testing running in parallel with all stages of production.

Dimensions of liner thickness

The liner thickness is checked in accordance with specific measuring methods. The test ensures that the required thicknesses are adhered to. For use in practical applications at elevated temperatures and simultaneously high vacuums.

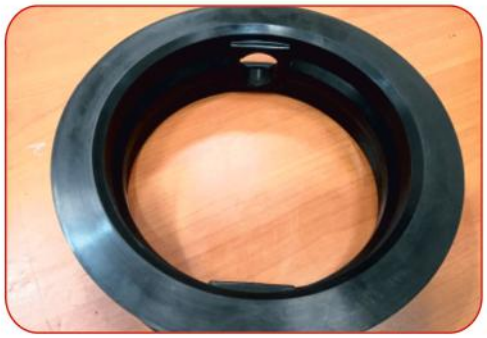

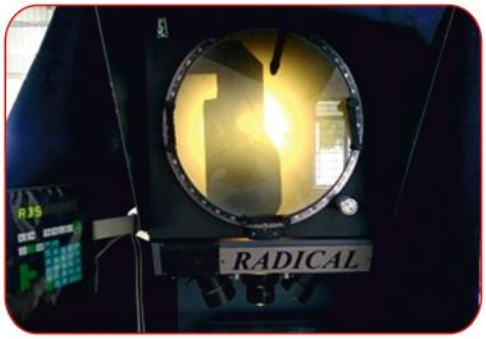

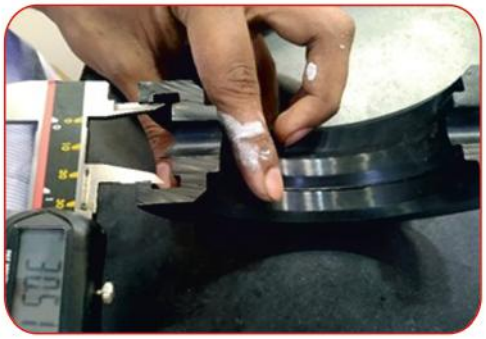

LOOSE LINERS:

Rubber lined butterfly valves provide an optimum solution to the corrosion problems encountered by industries. The rubber seat liner covers the entire wetted surface of the body and extends on to the flange contact faces, thus eliminating the possibility of any media contact with the body base metal.

The circularly moulded full back up elastomer and live loaded disc shoulder sealing ensures bubble tight closing of the valve with zero shaft leakage. Spherically machined disc prevents scuffing of the liner. The valve is adaptable for ON / OFF as well as control applications which can be fitted with actuators (ISO 5211 mounting) and accessories as required to meet the specific duty conditions.

Disc to shaft connection is positively secured through splines which eliminates transmission losses. Drive connection is devoid of pins and keys which improves the valve performance and its maintenance.

Rubber Lining Temperature details PN16	
Seat / Body Liner	**Temperature Range**
Nitrile Rubber	-10°C to 90°C
EPDM	-10°C to 120°C
Viton	-10°C to 150°C

Material of Construction

Components	Material
Body	• Cast iron (EN 1561) • Ductile iron (EN 1563) • Cast steel (A216 Gr. WCB)
Seat / Liner	• Nitrile • EPDM • Viton
Disc	• Ductile iron (EN 1563) • Cast steel (A216 Gr. WCB) with nylon / epoxy coat • Stainless steel (A351 Gr. CF8/CF8M)
Shaft	• A479 type 431 • A479 type 410
Bush	• Phosphor bronze • PTFE

Compliance Standards

Parameters	Standard
Design specification	EN 593 / SANS 1849 / API 609 / MSS SP 67
Pressure testing	EN 12266 / SANS 1849 / API 528 / ISO 5208
Face to face	EN 558 / SANS 1849 / API 609 / MSS SP 67
End connection	Wafer flangeless to suit SANS 1123
	Flanged EN 1092 / ASME B16.5

Pressure rating	
Rated working pressure (bar)	16
Shell test pressure (bar)	24
Seat test pressure (bar)	17.6

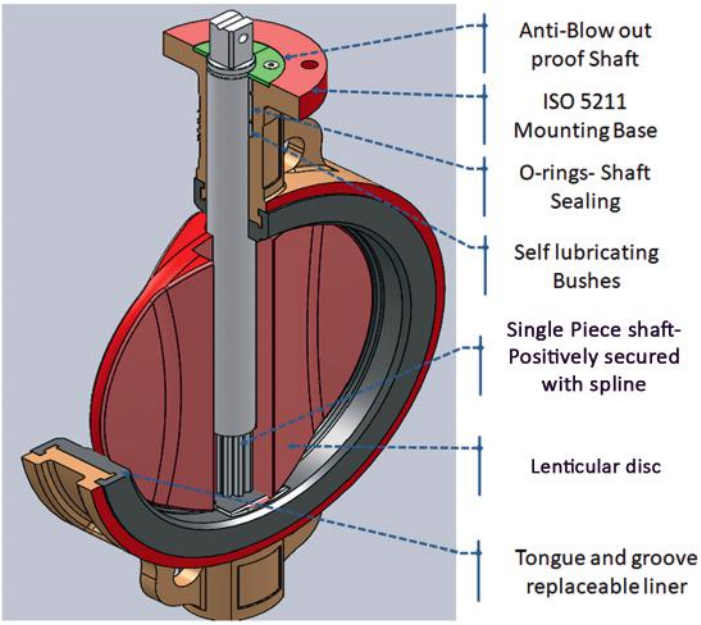

DN 50 to dn 400

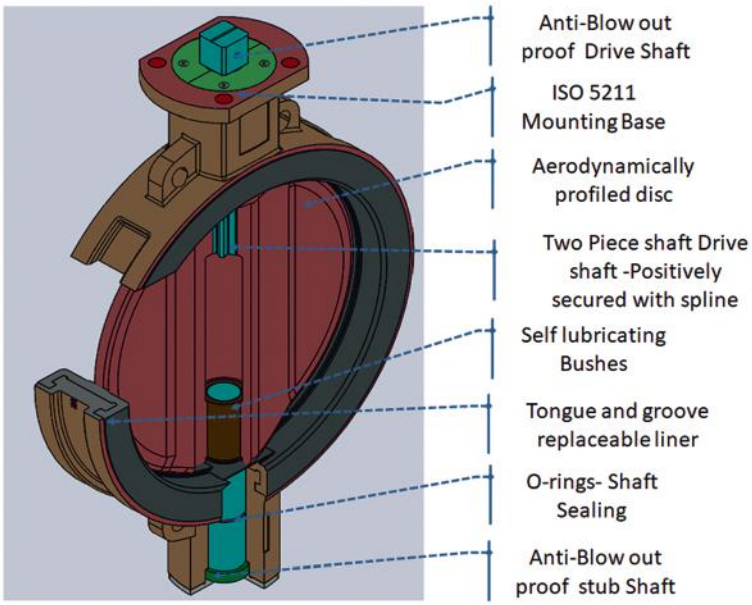

DN 450 to DN 600

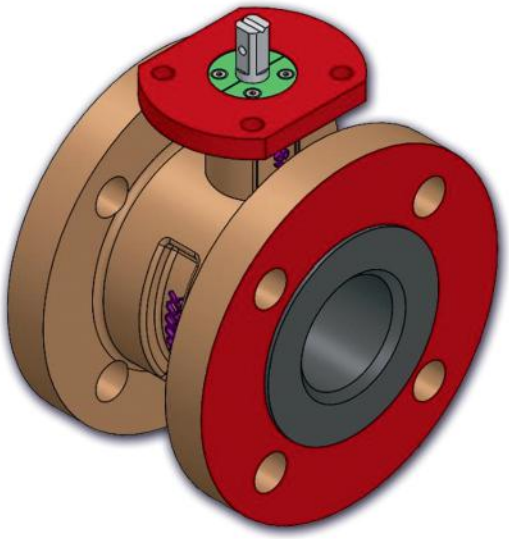

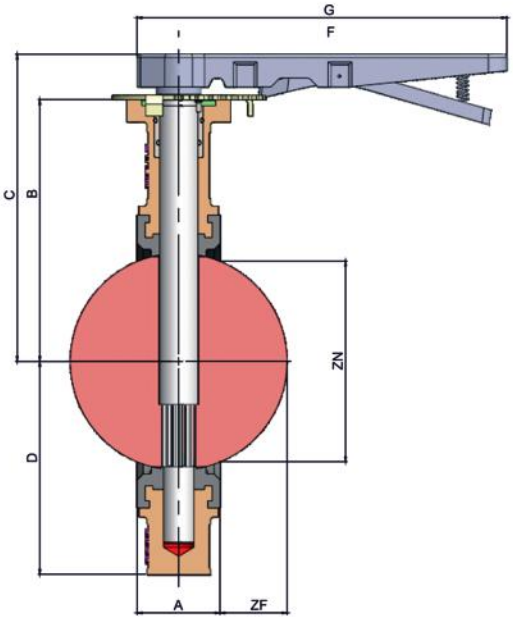

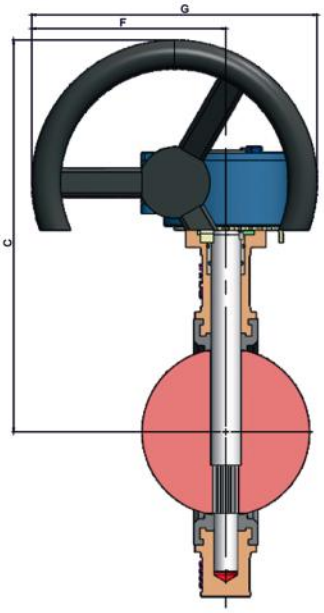

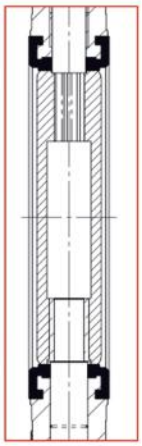

DN 450 - 600

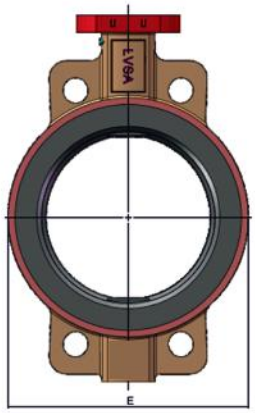

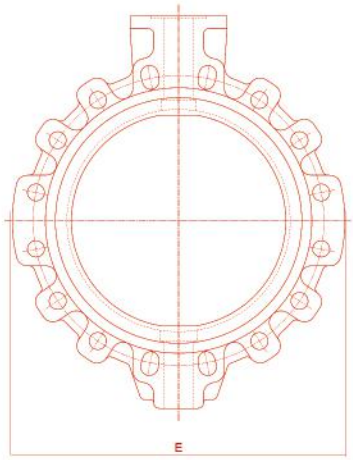

Valve size		A	B	C		D	E		F		G		ZN	ZF	Weight (Kgs)		Weight (Kgs)		Torque (Nm)
															FC Lever		Gear Unit		
NPS	DN			Flow control lever	Gear unit		Wafer	Lugged	Flow control lever	Gear unit	Flow control lever	Gear unit			Wafer	Lugged	Wafer	Lugged	
2	50	43	75	129	268	130	96	158	176	181	216	242	24	4	3	4	11	12.5	8
3	80	46	95	160	284	155	123	190	176	181	216	242	62	16	4	8	12	16	20
4	100	52	110	188	302	170	157	216	268	181	308	242	82	23	6	10.5	14	18.5	40
6	150	56	139	207	344	210	212	280	268	181	308	242	135	45	9.5	14.5	17.5	22.5	95
8	200	60	172	253	414	243	262	345	405	217	470	290	184	67	18	29.5	25	36	170
10	250	68	238	308	437	278	322	405	513	217	610	290	234	88	30	44	35	48.5	300
12	300	78	250	328	462	298	373	485	516	217	612	290	279	106	41	61	45	66	390
16	400	102	341	443	568	419	481	600	-	255	-	375	374	144	-	-	113	156	925
18	450	114	422	438	766	409	524	650	-	437	-	552	423	163	-	-	162	206	1230
20	500	127	444	470	802	441	583	710	-	437	-	552	475	183	-	-	189	264	1420
24	600	154	533	530	861	481	685	820	-	437	-	552	573	220	-	-	270	362	2500

Note: Torque figures are the maximum torque under static condition and do not include any safety factor. Consider selecting a suitable actuator taking into account any safety measures that should occur during operation. Torque figures are at the top shaft of the valve.

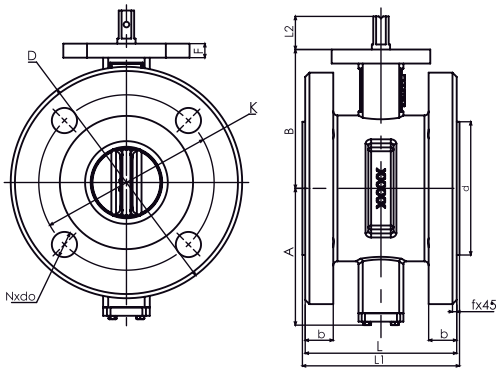

DN	A	B	L	L1	b	f	D	K	N-do	d
50	80	120	108	111	19	3	165	125	4-19	89
65	89	130	112	115	19	3	185	145	4-19	106
80	95	145	114	117	19	3	200	160	8-19	120
100	114	155	127	130	19	3	220	180	8-19	144
125	125	170	140	143	19	3	250	210	8-19	170
150	139	190	140	143	19	3	285	240	8-23	197
200	170	205	152	155	20	3	340	295	12-23	252
250	198	235	165	168	22	3	405	355	12-28	305
300	223	280	178	182	24.5	4	460	410	12-28	350
350	254	310	190	194	26.5	4	520	470	16-28	415
400	306	340	216	221	28	4	580	525	16-31	460
450	345	375	222	227	30	4	640	585	20-31	510
500	378	430	229	234	31.5	4	715	650	20-34	560
600	440	500	267	272	36	5	840	770	20-37	660
700	510	560	292	299	39.5	5	910	840	24-37	770
800	560	620	318	325	43	5	1025	950	24-41	871
900	638	685	330	337	46.5	5	1125	1050	28-41	972
1000	705	735	410	417	50	5	1255	1170	28-44	1080
1200	815	917	470	478	57	5	1485	1390	32-50	1270

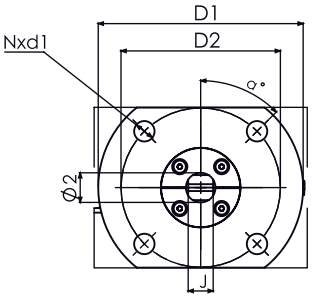

F	D1	D2	N-d1	a°	J	X	L2	Φ2	Weight
13	65	50	4-7	45	13.8	3	28	12.6	6
13	65	50	4-7	45	13.8	3	28	12.6	7.7
13	65	50	4-7	45	13.8	3	28	12.6	8
13	90	70	4-10	45	17.77	5	28	15.77	11
13	90	70	4-10	45	20.92	5	28	18.92	14
13	90	70	4-10	45	20.92	5	28	18.92	18
15	125	102	4-12	45	24.1	5	38	22.1	27
15	125	102	4-12	45	31.45	8	38	28.45	4
20	125	102	4-12	45	34.6	8	38	31.6	59
20	150	125	4-14	45	34.6	8	45	31.6	83
20	175	140	4-18	45	4.95	10	60	37.95	104
20	175	140	4-18	45	45.8	12	60	42.86	132
22	175	140	4-18	45	49.22	14	75	45.72	171
22	210	165	4-22	45	57.98	16	75	53.98	294
30	300	254	8-18	22.5	71.4	18	70	63.35	323
30	300	254	8-18	22.5	79	20	75	70	468
34	300	254	8-18	22.5	90	22	110	80	572
34	300	254	8-18	22.5	100	25	135	90	792
34	350	298	8-22	22.5	117	28	150	105	1292

CONTACT US

LVSA Valves - Johannesburg

46 Kindon Road, Robertsham, Johannesburg, South Africa, 2091.
Telephone : +27 (0) 11 680 2005
Fax: +27 (0) 11 680 2016
Email : sales@lvsagroup.co.za

LVSA Valves - Durban

8 Uitsig Road, Astra Park, Kingsburgh, Durban, South Africa.
Telephone : +27 (0) 31 914 1025
Email : kznsales@lvsagroup.co.za

LVSA Valves - Cape Town

97 Neil Hare Rd, Atlantis Industrial, Cape Town, 7349, South Africa
Telephone: +27 21 534 2451
Email : ctsales@lvsagroup.co.za

LVSA Limitada - Mozambique

Avenida Unido Africana numero 759, armazém 7,
Matola - Mozambique
Telephone: +258 83 911 1111
Email : info@lvsa.co.mz

www.lvsagroup.co.za