LVSA GROUP (PTY) LTD

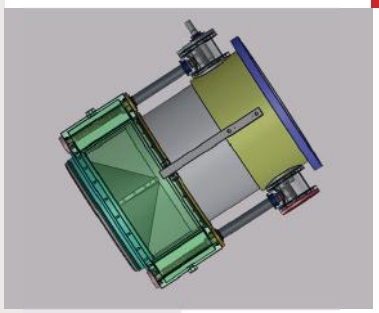

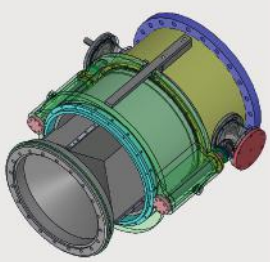

# SLEEVE VALVE

## GEAR AND HYDRAULIC OPERATED

Proudly Manufactured in South Africa

Size : DN 200 to DN 2000

Pressure Rating: PN16, 25 and 40

Operator : Gear / Hydraulic

Flange drilling : SANS 1123 / EN 1092

Coating: SS 304 materials are pickled and passivated

Installation: Valves are suitable are both horizontal and vertical installation

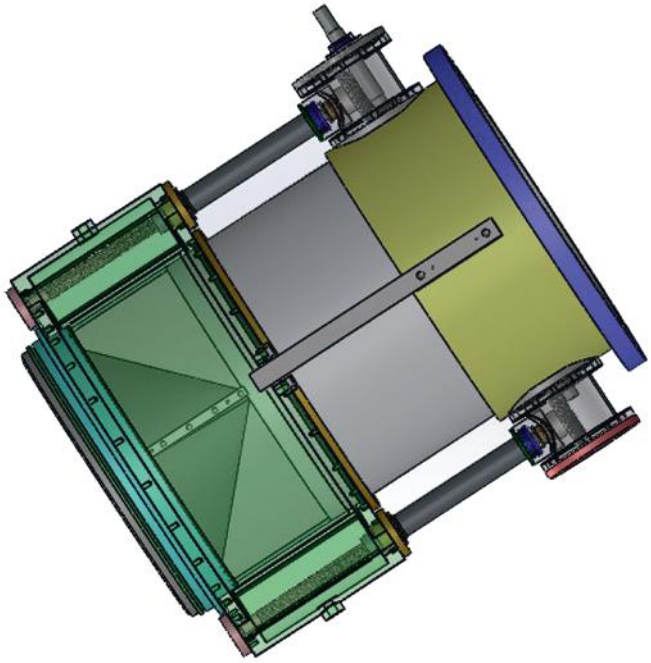

## Features :

- Precise gate control over its entire stroke range
- Metal to metal seal ensures longer seal life with minimal leakage.
- Zero maintenance
- Uniform flow pattern
- Discharge hoods are available on request

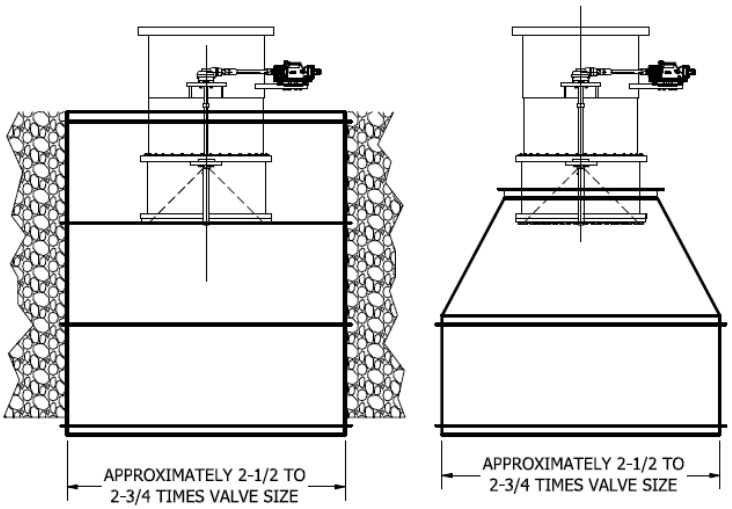

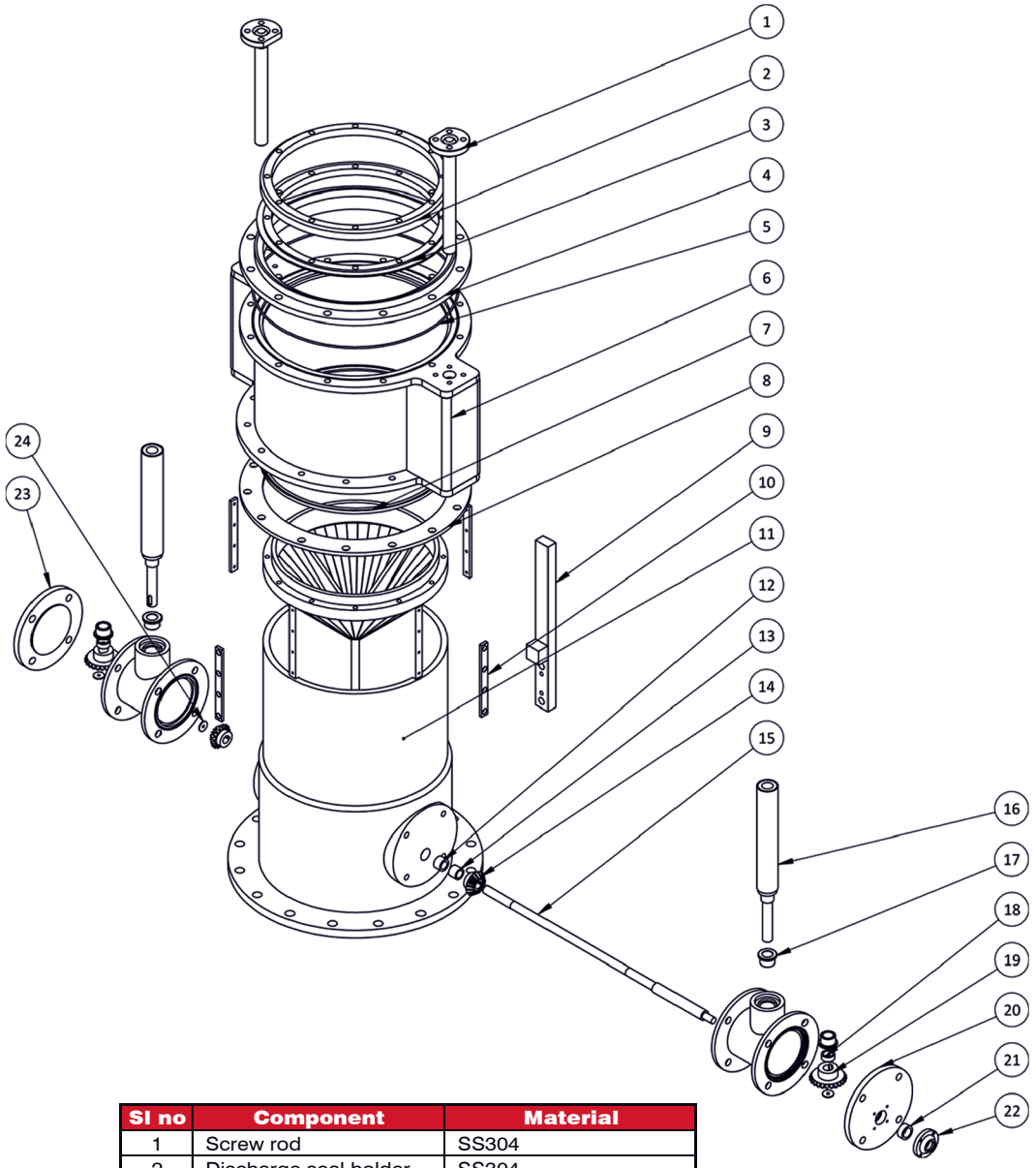


| Sl no | Component | Material |
|---|---|---|
| 1 | Screw rod | SS304 |
| 2 | Discharge seal holder | SS304 |
| 3 | Discharge seal | SS304 |
| 4 | Sleeve sealing cover | SS304 |
| 5 | O-ring | NBR/Nitrile/Buna-N |
| 6 | Guide sleeve body | SS304 |
| 7 | Gate seal | NBR/Nitrile/Buna-N |
| 8 | Botton seal cover | SS304 |
| 9 | Guide flat | SS304 |
| 10 | Guide wear plate | Bronze |
| 11 | Fixed fabricated body | SS304 |
| 12 | Bearing bush | Bronze |
| 13 | Drive sleeve | SS304 |
| 14 | Bevel gear -small | Manufacturer standard |
| 15 | Bevel drive shaft | SS304 |
| 16 | Threaded sleeve rod | SS304 |
| 17 | Bearing bush -driven end | Bronze |
| 18 | Driven sleeve | SS304 |
| 19 | Bevel gear -big | Manufacturer standard |
| 20 | Gear box cover drive end | SS304 |
| 21 | Bearing bush -drive end | Bronze |
| 22 | Wiper seal cover | SS304 |
| 23 | Gear box cover | SS304 |
| 24 | Lock washer | SS304 |

Note: Mild Steel variant with epoxy or fusion bonded epoxy or any equivalent coating as requested by the customer.

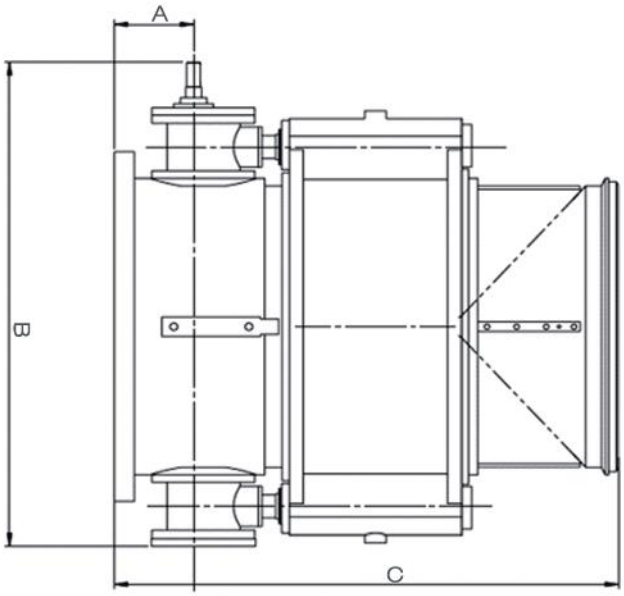


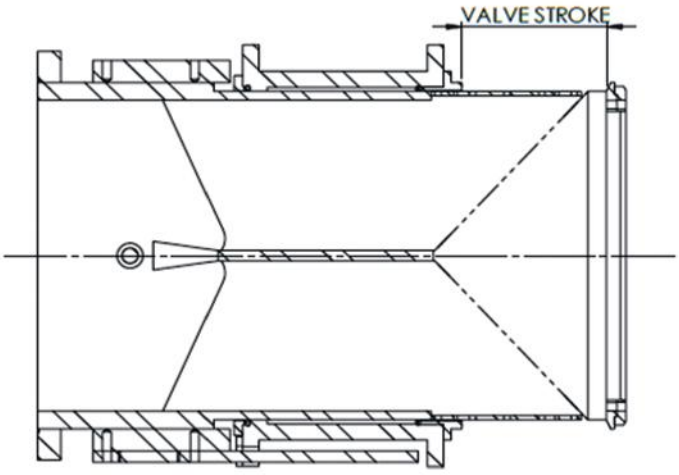


| Valve Size (DN) | PN 16 / 25 / 40 | | |
|---|---|---|---|
| | A | B | C |
| 200 | 115 | 330 | 760 |
| 250 | 115 | 415 | 810 |
| 300 | 155 | 500 | 950 |
| 350 | 155 | 580 | 1000 |
| 400 | 155 | 750 | 950 |
| 450 | 230 | 745 | 1200 |
| 500 | 230 | 830 | 1250 |
| 600 | 230 | 995 | 1350 |
| 700 | 230 | 1150 | 1275 |
| 750 | 270 | 1245 | 1625 |
| 900 | 270 | 1490 | 1750 |
| 1050 | 270 | 1740 | 1900 |
| 1200 | 305 | 1990 | 2150 |
| 1350 | 305 | 2240 | 2300 |
| 1500 | 380 | 2485 | 2550 |
| 1650 | 380 | 2735 | 2700 |
| 1800 | 460 | 2985 | 2950 |
| 1950 | 460 | 3230 | 3100 |

LVSA GROUP (PTY) LTD
BALL VALVE
Proudly Manufactured in South Africa

LVSA GROUP (PTY) LTD
BUTTERFLY VALVE
SPHERICALLY PROFILED DISC
Proudly Manufactured in South Africa

LVSA GROUP (PTY) LTD
DIAPHRAGM VALVE
Proudly Manufactured in South Africa

LVSA GROUP (PTY) LTD
KNIFE GATE VALVE
Proudly Manufactured in South Africa

LVSA GROUP (PTY) LTD
PRESSURE REDUCING VALVE
Proudly Manufactured in South Africa

LVSA GROUP (PTY) LTD
AIR RELEASE VALVE
TAMPER PROOF
Proudly Manufactured in South Africa

LVSA GROUP (PTY) LTD
RESILIENT SEATED GATE VALVE
Proudly Manufactured in South Africa

LVSA GROUP (PTY) LTD
WEDGE GATE VALVE
Proudly Manufactured in South Africa

## LVSA Group Pty Ltd - Durban - Manufacturing Facility

8 Uitsig Road, Astra Park, Kingsburgh, Durban, South Africa.
Telephone : +27 (0) 31 914 1025
Email : kznsales@lvsagroup.co.za

## Distribution Offices

### LVSA Group - Johannesburg

46 Kindon Road, Robertsham, Johannesburg, South Africa, 2091.
Telephone : +27 (0) 11 680 2005
Fax: +27 (0) 11 680 2016
Email : sales@lvsagroup.co.za

### LVSA Group - Cape Town

97 Neil Hare Rd, Atlantis Industrial, Cape Town, 7349, South Africa
Telephone: +27 21 534 2451
Email : ctsales@lvsagroup.co.za

### LVSA Limitada - Mozambique

Avenida Unido Africana numero 759, armazém 7,
Matola - Mozambique
Telephone: +258 83 911 1111
Email : info@lvsa.co.mz

www.lvsagroup.co.za