LVSA GROUP (PTY) LTD

GATE, GLOBE, CHECK VALVE

Proudly Manufactured in South Africa

Figure Number Example :

2	GA	1	1	X	,	WCB	/	No.8
A	B	C	D	E		F		G

A Valve Size

B Valve Type

Valve Type	Gate Valve	Globe Valve	Check Valve
Symbol	GA	GB	CH

C Valve Class

ANSI Class	150	300
Symbol	1	2

D End Connection

End Connection	Raised Flange	Butt Welding End
Symbol	1	2

E Special Construction

Description	EX Bonnet	Port	Electric Actuator	Pneumatic Actuator	Seal Welded
Symbol	X	FB	M	P	W

F Body Materials

Body Materials	WCB	WC6	WC9	C12	C12A	LCB\LCC	Cf8	CF8M
ASTM Ref.	ASTM A216	ASTM A217	ASTM A217	ASTM A217	ASTM A217	ASTM A 352	ASTM A 351	ASTM A 351

G Trim Materials

Symbol	Disc Surface	Seat Surface	Stem Materials
No.1	13Cr	13Cr	ASTM A182-F6a
No.2	18Cr-8Ni	18Cr-8Ni	ASTM A182-F304
No.5	Hard faced	Hard faced	ASTM A182-F6a
No.8	13Cr	Hard faced	ASTM A182-F6a
No.10	18Cr-8Ni-Mo	18Cr-8Ni-Mo	ASTM A182-F316
No.12	18Cr-8Ni-Mo	Hard faced	ASTM A182-F316
No.15	18Cr-8Ni	Hard faced	ASTM A182-F304
No.16	Hard faced	Hard faced	ASTM A182-F316

Cast Steel Valve Product Range															
Applicable Standards	Valve type	End connection	Pressure Class	Size											
				2	3	4	6	8	10	12	14	16	18	20	24
API 600	Gate Valve Bolted Bonnet	Flanged / Butt weld	150	•	•	•	•	•	•	•	•	•	•	•	•
			300	•	•	•	•	•	•	•	•	•	•	•	•
API 623	Globe Valve Bolted Bonnet	Flanged / Butt weld	150	•	•	•	•	•	•	•	•	•	•	•	•
			300	•	•	•	•	•	•	•	•	•	•	•	•
API 594	Check Valve Bolted Bonnet	Flanged / Butt weld	150	•	•	•	•	•	•	•	•	•	•	•	•
			300	•	•	•	•	•	•	•	•	•	•	•	•

LVSA Gate, Globe & Check Valves

The API 600 / API 623 / API 594 Gate, Globe and Swing check valves are a perfect choice for any oil & gas applications. They are designed for tight sealing and ease of operation. The valves are available with flanged ends or butt-weld ends, in pressure ratings from ASME class 150 & class 300, in a variety of materials of constructions.

Gate valves have a flexible wedge, outside screw and yoke and bolted bonnet construction.

Globe valves feature a ball-type disc, outside screw and yoke and bolted bonnet construction. They conform to API 623 and also meet the general requirements of API 600, including wall thickness and stuffing box dimensions.

Check valves are swing type and bolted cover construction. They conform to API 594 and meet the general requirements of API 600, including wall thickness.

Body & Bonnet

Body & bonnet are profiled & accurately machined for better performance. Flow bore and wall thickness are maintained as per the code requirement.

Guide ribs ensures perfect alignment of stem and a smooth operation.

Check valve bodies are streamlined for smooth flow & reduce the pressure drop.

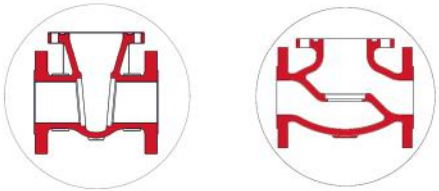

Back Seat

LVSA gate and globe valves have a precision machined back seat bush which is threaded on to the bonnet and positively secured.

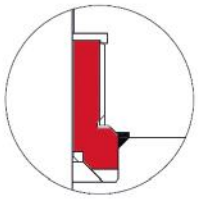

Body & Bonnet Joint

1) The body bonnet joint for class 150 gate valves are oval. Class 300 and globe valves have a circular body-bonnet joint.

2) Gate valves for class 150 rating have a flat face joint with a graphite gasket with Stainless steel inserts. Class 300 rating have a male-female type joint with a spirally wound gasket.

3) Globe and check valves in class 150 & 300 ratings have a male-female type joint with a spirally wound gasket.

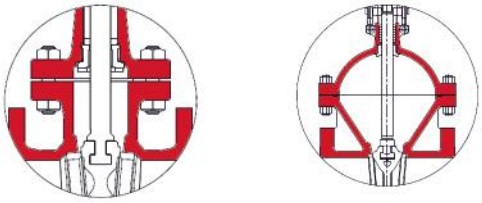

Square Joint Circular Joint

Flexible Wedge

Flex wedge design ensures tight sealing over extreme pressure & temperature range.

Flexs to pipeline and thermal deformation.

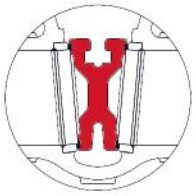

Conical / Tapered type Disc

LVSA globe valves feature a conical / tapered type disc which ensures tight sealing. Sealing surface are hard faced based on the application.

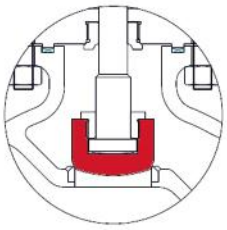

Swing-type Disc Assembly

The one-piece construction is securely fastened to the hinge by means of a lock nut and pin. The disc is free to rotate to avoid localized wear. The hinge pin offers excellent wear resistance properties.

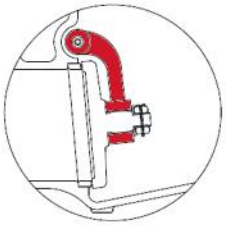

Seat Ring

LVSA gate valves and check valves feature a seal welded replacable seat ring that offers a leakproof tightness design as it eliminates the leakage path between the seat ring and the body. This design is superior to threaded seats which can loosen up due to temperature fluctuations, corrosion or vibration and result in leakage.Threaded seat rings are optional. Seat face is hard faced with Stellite 6

Stem

LVSA gate and globe valves feature a stem of one-piece construction, ACME threaded and precision machined with polished surfaces to reduce friction, minimize leakage and extend stem life. They are forged one piece stem designed as per the API 600 & API 623 requirements. All designs are with blow-out proof stem.

In gate valves, the heavy forged T-head engages with the T-slot in the wedge. The stem also has an integral self-adjusting radial back seat shoulder that matches with the back seat bush in the bonnet.

In globe valves, the stem is held to the disc by a stem nut that permits the disc to swivel. This free floating design ensures uniform seating.

Yoke Sleeve and Yoke Bush

Self lubricated sleeve / bush which ensures smoother operation and proper stem alignment.

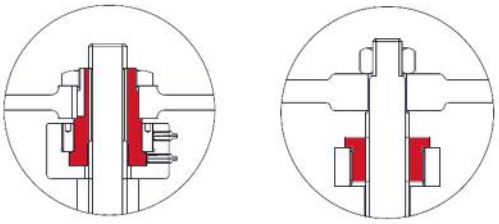

Packing / Stuffing box

Designed in accordance with product code requirement and meets API 624 requirements.

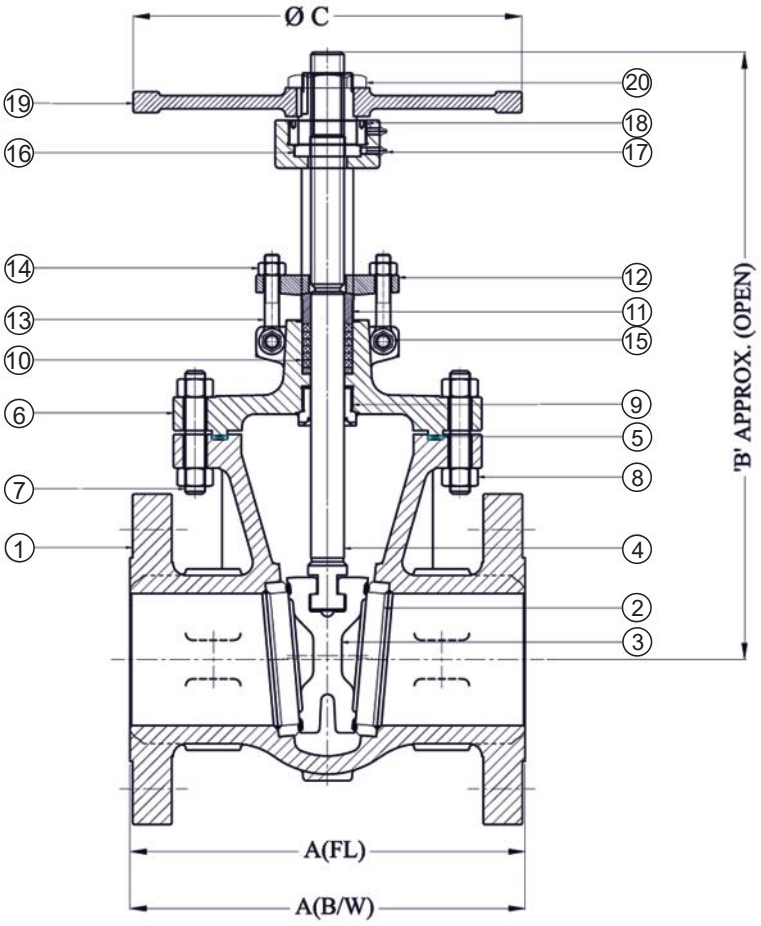

Sl. No	Description	Material
1	Body	ASTM A216 Gr. WCB
2	Body seat ring	ASTM A105 + HF*
3	Wedge	ASTM A216 Gr. WCB + 13% Cr. steel
4	Stem	ASTM A182 Gr. F6a
5	Gasket	ASTM A308 spirally-wound SS304 / SS316 with graphite filler
6	Bonnet	ASTM A216 Gr. WCB
7	Stud	ASTM A193 Gr. B7
8	Stud nut	ASTM A194 Gr. 2H
9	Back-seat bush	13% Cr. steel
10	Packing	Graphite with braided end rings
11	Gland	Steel
12	Gland flange	ASTM A105 / ASTM A216 Gr. WCB
13	Eye bolt	Cr. - Mo steel
14	Eye bolt nut	ASTM A194 Gr. 2H
15	Groove pin	Steel
16	Yoke sleeve (Stem nut)	ASTM A439 Type D2
17	Grease fitting	Steel
18	Retainer nut	Steel / Ductile iron / Malleable iron
19	Handwheel	
20	Handwheel nut	
	Name plate	SS304

Valve Size	Class 150						Class 300					
	A		B	C	Aprrox. Wt		A		B	C	Aprrox. Wt	
	Fl.	B/W			Fl.	B/W	Fl.	B/W			Fl.	B/W
50 (2")	178	216	376	200	21	19	216	216	399	200	25	23
65 (2 1/2")	191	241	480	230	32	27	241	241	505	230	48	34
80 (3")	203	283	480	230	35	27	283	283	505	230	53	41
100 (4")	229	305	584	250	53	43	305	305	604	250	78	55
125 (5")	254	381	750	250	75	64	381	381	850	350	135	105
150 (6")	267	403	790	300	87	77	403	403	850	350	158	111
200 (8")	292	419	996	350	139	118	419	419	1039	400	234	186
250 (10")	330	457	1205	400	210	198	457	457	1265	450	355	284
300 (12")	356	502	1410	450	302	271	502	502	1460	500	495	400
350 (14")	381	572	1539	500	410	365	762	762	1590	500	750	620
400 (16")	406	610	1752	500	520	490	838	838	1791	600	958	850
450 (18")	432	660	1956	600	690	665	914	914	2126	680	1310	1075
500 (20")	457	711	2159	600	900	865	991	991	2261	680	1640	1525
600 (24")	508	813	2565	680	1410	1375	1143	1143	2654	760	2460	2075

FL - Flanged End
B/W - Buttweld End

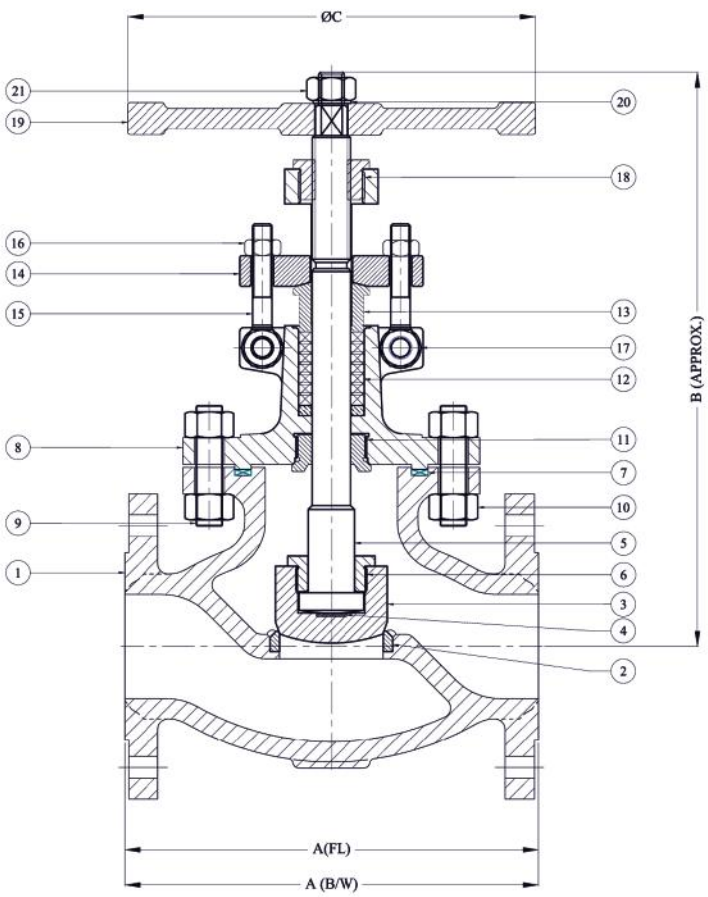

Sl. No	Description	Material
1	Body	ASTM A216 Gr. WCB
2	Body seat ring	ASTM A182 Gr. F6a + HF
3	Disc	ASTM A216 Gr. WCB + 13% Cr. steel
4	Disc washer	13% Cr. steel
5	Stem	ASTM A182 Gr. F6a
6	Disc stem nut	13% Cr. steel
7	Gasket	ASTM A308 / SS316
8	Bonnet	ASTM A216 Gr. WCB
9	Stud	ASTM A193 Gr. B7
10	Stud nut	ASTM A194 Gr. 2H
11	Back-seat bush	13% Cr. steel
12	Packing	Graphite with braided end rings
13	Gland	13% Cr. steel
14	Gland flange	ASTM A105 / ASTM A216 Gr. WCB
15	Eye bolt	Cr. - Mo steel
16	Eye bolt nut	ASTM A194 Gr. 2H
17	Groove pin	Steel
18	Yoke bush	ASTM A439 Type D2
19	Handwheel	Steel / Ductile iron / Malleable iron
20	Washer	Steel
21	Handwheel nut	ASTM A563 Gr. B
	Name plate	SS304

Valve Size	Class 150						Class 300					
	A		B	C	Aprrox. Wt		A		B	C	Aprrox. Wt	
	Fl.	B/W			Fl.	B/W	Fl.	B/W			Fl.	B/W
50 (2")	203	203	335	200	23	20	267	267	355	200	33	28
65 (2 1/2")	216	-	355	200	35	-	292	-	410	200	46	-
80 (3")	242	242	421	250	41	38	317	317	457	250	58	50
100 (4")	292	292	477	250	66	62	356	356	556	350	97	84
150 (6")	406	406	575	350	118	110	445	445	668	450	186	164
200 (8")	495	495	680	450	207	195	559	559	830	600	329	296
250 (10")	623	623	895	350	335	320	623	623	1206	600	520	471
300 (12")	699	699	1215	600	495	470	711	711	1160	760	705	634

FL - Flanged End
B/W - Buttweld End

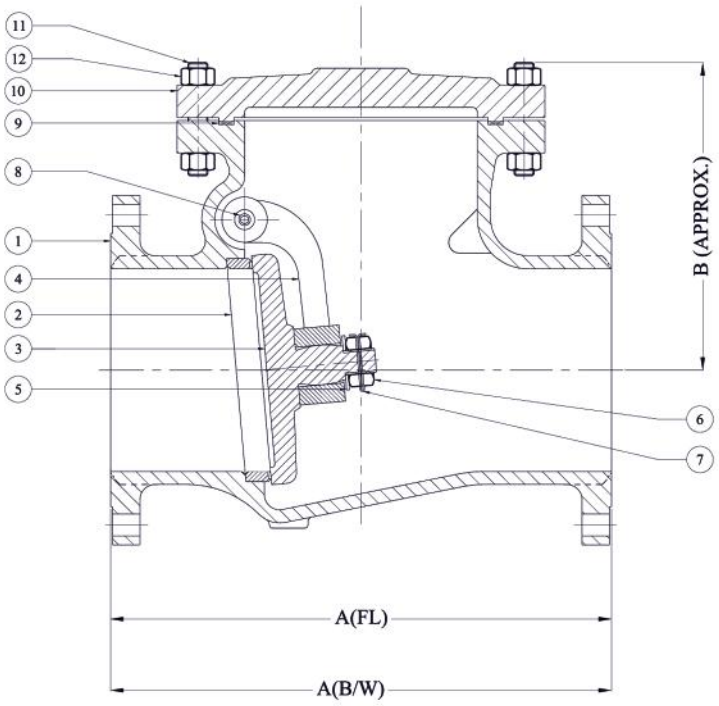

Sl. No	Description	Material
1	Body	ASTM A216 Gr. WCB
2	Body seat ring	ASTM A105 + HF*
3	Disc	ASTM A216 Gr. WCB + 13% Cr. steel
4	Hinge	ASTM A216 Gr. WCB
5	Disc washer	13% Cr. steel
6	Disc nut	SS304
7	Disc nut pin	13% Cr. steel
8	Hinge pin	13% Cr. steel
9	Gasket	ASTM A308 / SS316
10	Cover	ASTM A216 Gr. WCB
11	Stud	ASTM A193 Gr. B7
12	Stud nut	ASTM A194 Gr. 2H
	Hinge pin cover	ASTM A105
	Hinge pin cover bolt	ASTM A193 Gr. B7
	Name plate	SS304

Valve Size	Class 150					Class 300				
	A		B	Aprrox. Wt		A		B	Aprrox. Wt	
	Fl.	B/W		Fl.	B/W	Fl.	B/W		Fl.	B/W
50 (2")	203	203	165	21	19	267	267	165	24	19
65 (2 1/2")	216	216	175	24	20	-	-	-	-	-
80 (3")	241	241	181	34	30	317	317	190	45	36
100 (4")	292	292	213	49	42	356	356	229	70	56
150 (6")	356	356	273	88	79	444	444	279	151	129
200 (8")	495	495	335	168	154	533	533	343	242	210
250 (10")	622	622	406	280	260	622	622	368	333	284
300 (12")	698	698	483	413	382	711	711	412	450	378
350 (14")	788	788	515	509	466	839	839	559	659	556
400 (16")	864	864	455	580	524	864	864	636	873	747
450 (18")	978	978	500	635	583	978	978	562	1090	900
500 (20")	978	978	675	925	855	1016	1016	675	1360	1176
600 (24")	1295	1295	780	1500	1403	1346	1346	790	1850	1573

FL - Flanged End
B/W - Buttweld End

CONTACT US

LVSA Valves - Johannesburg

46 Kindon Road, Robertsham, Johannesburg, South Africa, 2091.
Telephone : +27 (0) 11 680 2005
Fax: +27 (0) 11 680 2016
Email : sales@lvsagroup.co.za

LVSA Valves - Durban

8 Uitsig Road, Astra Park, Kingsburgh, Durban, South Africa.
Telephone : +27 (0) 31 914 1025
Email : kznsales@lvsagroup.co.za

LVSA Valves - Cape Town

97 Neil Hare Rd, Atlantis Industrial, Cape Town, 7349, South Africa
Telephone: +27 21 534 2451
Email : ctsales@lvsagroup.co.za

LVSA Limitada - Mozambique

Avenida Unido Africana numero 759, armazém 7,
Matola - Mozambique
Telephone: +258 83 911 1111
Email : info@lvsa.co.mz

www.lvsagroup.co.za